AIC2 (Preliminary)
Additional Injector Controller

Description:

The AIC2 Additional Injector Controller provides a convenient way to inject additional fuel on an internal combustion engine. It is intended primarily for use with engines that have been converted to forced induction with the addition of a turbo or supercharger. It is a particularly effective way to add fuel on direct injected engines.

The AIC2 comes in two versions. The AIC2-P has two internal 4-bar pressure sensors. It can be configured for absolute, gauge or differential measurement. One of the sensors can also be used for elevation compensation. The AIC2-V version does not have internal pressure sensors and uses an external voltage to determine engine load.

The AIC2 can control between one and eight high impedance injectors. It can also be configured to drive one or two low impedance injectors. All injectors are batch fired according to a pulse width map table which features user-definable row and column breakpoints for load and RPM.

The AIC2 is programmed over a USB interface with the TunerPro RT engine management software. Bin files contain program data. Xdf definition files configure the user interface. Adx files configure data acquisition for real-time display and logging. Example bin, xdf and adx files are available at www.splitsec.com.

An extremely versatile tach input is compatible with most engine speed signals. User definable pre-scaler and post-scalers produce an accurate tach reading on virtually any engine. The number of injection pulses per engine cycle are selectable between one and eight.

There are calibration tables for each pressure sensor as well as two voltage inputs. These tables perform sensor linearization and unit conversion. There are compensation tables for air temperature, elevation and injector dead time.

Features:

- Two internal 4-bar map sensors
- USB interface
- Real-time programmable
- Tach pre-scaler to work with wide range of inputs
- User selectable number of injection pulses per engine cycle
- Drives between one and eight injectors
- Two 2-dimensional injection pulse width map tables
- User definable table breakpoints
- External input for map switching
- Laptop programmable with TunerPro RT software
- Compensation for air temp, elevation and injector dead time

Versions:

AIC2-P

The AIC2-P has two internal 4-bar pressure sensors called PT1 and PT2. These sensors can be configured to produce absolute, gauge or differential pressure readings. PT2 can be used to generate a reference signal for elevation compensation.

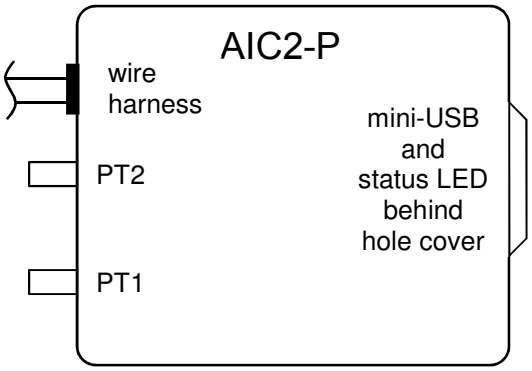

AIC2-V

The AIC2-V does not have internal pressure sensors. An external 0-5 V signal is used as the load signal.

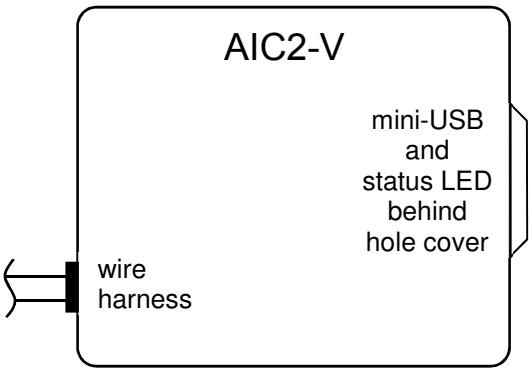

Ordering Options:

The complete part numbers for the two standard versions of the AIC2 are:
AIC2-P21, Pressure mode, two injector connectors, EV1 style
AIC2-V21, Voltage mode, two injector connectors, EV1 style

EV1 and EV6 Injector connectors with 24” pigtails are available and may be used by the user to modify the harness. Each internal injector driver can run up to four high impedance injectors.

Wire Assignments:

LABEL	CONNECT TO	Wire gauge	WIRE COLOR
BATT+	Battery positive (switched +12 V)	18	Red
BATT-	Battery negative (chassis ground)	18	Black
SIG GND	ECU signal ground	20	Black/yellow
TACH	Engine speed signal	20	Yellow/black
VIN	External load voltage input (optional)	20	Green
IAT	Air temp sensor (optional)	20	Gray
AFR	External AFR meter	20	Yellow
MAP SW	Switch to ground to select table B	20	Brown
INJ+ (2)	Injector plug positive (B+)	20	Red
INJ- (DR1)	Injector plug negative (driver 1)	20	Tan
INJ- (DR2)	Injector plug negative (driver 2)	20	Tan/Black

Connections:

BATT+

Connect to a switched, fused source of +12 V. This connection powers the unit and all the additional injectors it controls.

BATT-

Connect to a power ground connection. Chassis ground is frequently used. This connection carries the load current for all injectors.

SIG GND

Connect to the sensor ground for the stock ECU. This connection is critical for accurate sensor measurements for VIN1 and VIN2. Connection to chassis ground will degrade accuracy and may induce noise.

TACH

Connect to a signal that is proportional to engine speed. Examples of suitable signals include coil triggers, injector drives, cam sensors and crank sensors. The tach pre-scaler will be set to divide the pulse rate of the tach signal down to the engine cycle rate. The engine cycle rate is the cam rate on a 4-stroke engine and the crank rate on a 2-stroke engine.

VIN

Connect to an external load signal when not using the internal maps sensor(s). VIN1 may be connected to an external map sensor, MAF sensor or other 0-5 V load signal.

IAT

Connect to an IAT (intake air temp) sensor. This input may be connected to the signal from an existing IAT sensor or used with a dedicated sensor. When used with a dedicated sensor, the AIC2 can be configured to provide the necessary 1 kΩ pull-up resistor to 5 V.

AFR

Connect to an external AFR meter. The adx file is configured to display the 0-5 V signal as true air/fuel ratio.

MAP SW

Ground this wire to switch to map table B. If this feature is not used, this wire may be left disconnected.

INJ+

Connect to the high side of the injector(s). The INJ+ wires provide a constant +12 V. There are two INJ+ wires. Each can supply one to four high impedance injectors or a single low impedance injector.

INJ-

Connect to the low side of the injector(s). The INJ- wires provide the variable pulse width drive by pulling the low side to ground to turn on injection. There are two INJ- wires. Each can supply one to four high impedance injectors or a single low impedance injector.

Wiring:

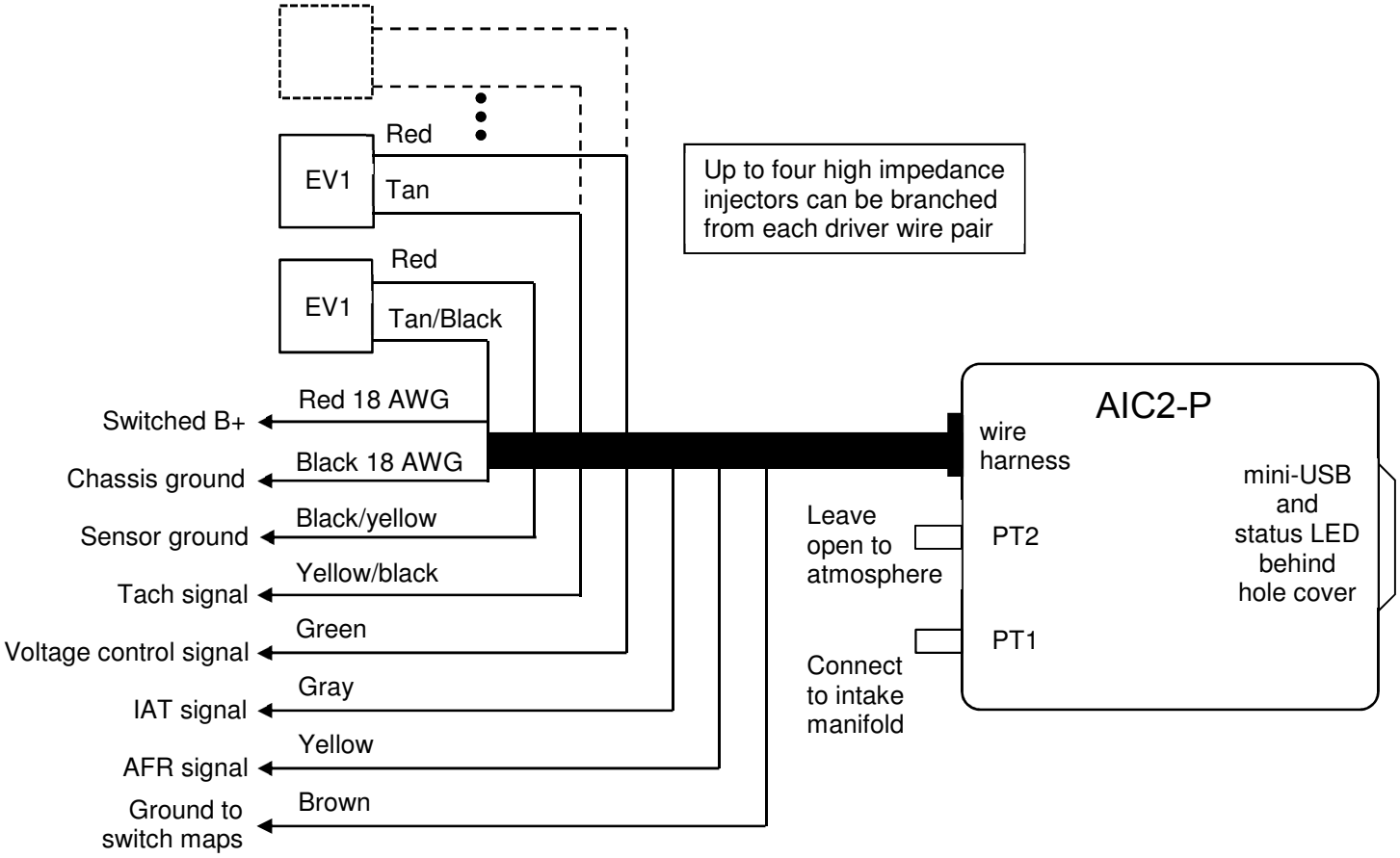

Use solder and heat shrink for the best electrical connections. The green, gray, yellow and brown wires may be left disconnected if they are not being used.

Internal Block Diagram:

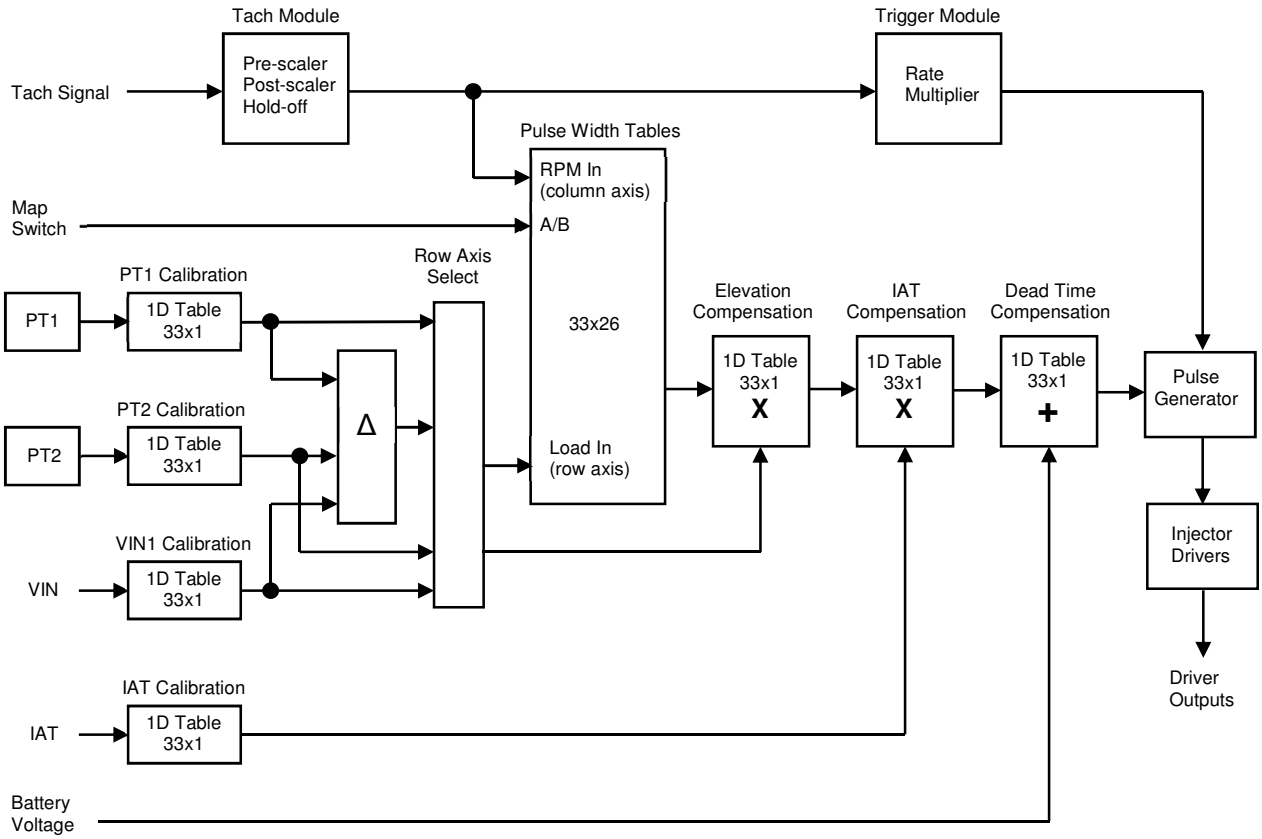

Functions:

Tach Circuit

The tach input has an internal threshold voltage of approximately 2.5 V. It has a high voltage capability and will not be damaged by inductive spikes. The pre-scaler is used to divide down to the base rate of the engine. The base rate is the cam rate on a 4-stroke engine and the crank rate on a 2-stroke engine. The post-scaler is used to calculate RPM from the base rate. Set the post-scaler to 2 for a 4-stroke engine and to 1 for a 2-stroke.

The hold-off function is used to prevent noise form disrupting the RPM reading. When used with a crank or cam sensor, the hold-off function is not needed. It is primarily intended for use with coil primary signals that have a lot of ringing following transitions. A typical hold-off setting on a coil would be 6 ms.

PT1 and PT2

PT1 and PT2 are internal 4-bar pressure sensors that are included with “P” suffix units.

Calibration Tables

There are two sets of calibration tables which are used to convert the voltage output of the pressure sensors to read in bar or psi. These tables should not have to be changed. The tables for VIN1/MAP can be used to adjust for the full scale range of an external pressure sensor or any other 0-5 V signal. The calibration tables for VIN2/IAT convert an IAT sensor voltage to read in degrees F or C.

Row Axis Select

The row axis select provides flexibility in the signal used for the load axis on the map table. Load can be absolute, differential or gauge pressure based on PT1 and PT2. Alternately load can come from an external voltage on VIN1.

Pulse Width Tables

There are two 33x26 pulse width tables for injector pulse width in milliseconds. Map A or B is selected by an external input. The default table is A. Ground the map select line to select table B. The breakpoints for rows and columns are user definable. The range can be restricted to the actual RPM and pressure range of the engine to increase resolution. Bi-linear interpolation is used to make smooth transitions between breakpoints.

Compensation Tables

There are three 33x1 compensation tables. Elevation compensation table values are factors that are multiplied by the injection pulse width from the main table. These factors are adjusted to provide consistent fueling over elevation change. Elevation information comes from the pressure reading from PT2. When PT2 is left open to atmospheric pressure, its reading varies according to elevation change.

Air temperature compensation table values are also factors multiplied by injection pulse width. These factors provide consistent fueling as intake air temperature changes. The air temperature reading requires an external air temp sensor. This sensor may be a dedicated sensor or the existing sensor used by the stock ECU.

The battery voltage compensation table is used for injector dead time compensation. All fuel injectors have a dead time which is related to the turn-on and turn-off delays for the injector. Dead time is the difference between the pulse width of the control signal and the actual time duration that the injector is on. Injector dead time is highly dependent on battery voltage and varies widely among different types of injectors. Battery voltage compensation table values are added to the injection pulse width from the main table.

Trigger Module

The trigger module determines how many evenly spaced injection pulses there are per engine cycle. The number of pulses is user-definable in software. In cases where the injection is upstream before the throttle, the number of pulses should equal the number of cylinders. When controlling port injectors, the number of pulses should be at least two.

Pulse Generator

The pulse generator produces the control signal use to drive injection. The rate of injection pulses is determined by engine RPM, the pre-scaler value and the defined number of injection pulses per engine cycle. The pulse width is the value from the main table modified according to the compensation table values.

Injectors Drivers

There are two injector drivers. Each can drive either a single low-impedance injector or up to four high impedance injectors.

Software:

The AIC2 is programmed with the TunerPro RT engine management software. The software can be downloaded for free at www.tunerpro.net. We strongly recommend that you register and make the requested donation to support future enhancements to TunerPro RT.

TunerPro RT is a very flexible and powerful user interface for engine tuning. It uses three types of files to operate, xdf (definition files) bin (binary data files) and adx (data acquisition files). Xdf files define the parameters that can be adjusted and their memory locations. Bin files store the data that is used to tune the engine. Adx files specify the real-time data and dashboard functions.

Split Second supplies the xdf, starting bin and adx files for the AIC2. Engine tuning is accomplished by modifying the data stored in the bin. Multiple bin files may be created and stored that represent different states of tune.

Data Connection:

There is a mini-USB connector behind the hole plug on the side of the unit. Use a USB 2.0 A to mini-B 5-pin cable to connect the unit to your laptop computer.

Status LED:

There is a status LED behind the hole plug on the side of the unit. It will pulse once per second when the unit has power.

Programming:

Open Calibration File

1) Launch TunerPro RT
2) Select the AIC2 definition file (xdf). Xdf files are posted at www.splitsec.com under downloads.
3) If you have a bin file stored on your laptop that you plan to use, click on Open Bin to select it.
4) If you don't already have a bin, you can read the one out of your unit. Click the Initialize emulation hardware.
5) Click the download bin from emulator icon.
6) Use Save Bin As to name and save the current bin on your hard drive
7) If you want to save the starting bin in its current state before tuning, use Save Bin As to save the current bin with a different name.

Customize TunerPro RT Settings

1) All of the adjustments you can make are selected within the Parameter Tree menu bar on the left side of the screen.
2) Select the Parameter Category View Type to group by Settings, Calibration, Mapping and Compensation.
3) Use the plus sign next to each to expand your selections.

4) All selections are either a scaler, flag or table

   a. Scalers are a numeric value and are represented by a π icon. They can be used to set a specific value such as a rev limit. They can also be used to make a selection among several options.

   b. Flags are settings used to turn options on or off.

   c. Tables are either 1D or 2D depending on their function.

5) Hold the pointer over a parameter to see the comments that explain how to use it.

6) Select Parameter Comments under the View menu to see comments displayed at the bottom of the screen whenever a parameter is selected.

7) Double click a parameter to display that parameter window on the screen.

8) Under Tools and Preferences, select reverse rows to configure tables so that the rows go in increasing or decreasing order as row value increases.

Configure the bin for the Application

1) Set the tach pre-scaler to divide the tach pulse rate down to the engine cycle rate. The engine cycle rate is the cam revolution rate for a 4-stroke engine and the crank revolution rate for a 2-stroke engine. Changes to the pre-scaler setting take effect after the power to the unit is cycled off and on.

2) The pre-scaler allows a wide variety of signals to be used to for the tach input. These signals include crank sensor, cam sensor, coil trigger and injector signals. The table below shows a variety of examples and how to set the pre and post scaler values. There are lots of possibilities. This table is intended to give a feel for how to set the pre-scaler and post-scaler values.

Engine	Signal	Description	Pre-scaler	Post-scaler
4-stroke	Crank	12 tooth encoder wheel	24	2
4-stroke	Cam	4 tooth encoder wheel	4	2
4-stroke	Ignition	True sequential coil trigger	1	2
4-stroke	Ignition	Wasted spark coil pack	2	2
4-stroke	Injector	True sequential injector	1	2
2-stroke	Crank	3 tooth encoder wheel	3	1
2-stroke	Crank	1 tooth encoder	1	1

3) Set the tach post-scaler to two for a 4-stroke and one for a 2-stroke engine.

4) Use the Tach Holdoff Time to prevent noisy signals form creating an erratic RPM reading.

5) If you are using a dedicated IAT sensor to measure intake air temperature, select IAT pull-up enable to turn on an internal pull-up resistor. If you are taping onto an existing IAT sensor for the stock ECU, leave that pull-up turned off.

6) The load source select is used to determine the signal source for the main injection pulse width table. The signal can come from multiple combinations of PT1, PT2 and VIN.

7) The manual input scalers can be used to test the injection output by selecting a load value for the pulse width table.

8) The Pulses per Engine Cycle setting depends on the location of the additional injector(s). If the injector(s) are used upstream before the throttle body, the number of pulses should equal the number of cylinders. If the AIC2 is being used to run port injectors, it is normally set to two pulses per cycle. A setting of four would pulse the additional injectors four times per cam revolution which would provide identical fueling to all cylinders.

9) There are sensor calibration tables for PT1, PT2, VIN (external load signal) and IAT. Each table has user definable breakpoints as well as calibration values. In most cases the defaults values will not have to be changed. These table are grouped into Metric, English and Volts Only. Use the table in the group you are most comfortable with.

    a. PT1 and PT2 are 4-bar sensors.

    b. VIN1 can calibrated in equivalent pressure or by voltage

    c. VIN2 can be calibrated in equivalent temperature or by voltage.

10) There are compensation tables for elevation (ambient pressure), IAT (air temp) and injector dead time. Each of these tables has user definable breakpoints as well as calibration values. These tables are grouped into Metric, English and Volts Only. Use the table in the group you are most comfortable with. Each compensation table may be turned off.

    a. First order compensation for atmospheric pressure occurs when load is calculated as PT1-PT2. In that case you may turn off elevation compensation or use the table with less compensation to account for second order effects.

    b. Injection pulse width is multiplied by the value in the elevation compensation table

    c. The IAT compensation table is pre-loaded with calculated values to account for changes in air temperature. Injection pulse width is multiplied by the value in the compensation table.

    d. The dead time compensation table adds to the injection pulse width according to the values in the table to account for different battery voltages. Injector dead time varies widely for different injectors. The default values are representative for a typical injector.

Tuning

1) If you are modifying an existing tune, keep a copy of the starting bin should you ever need to go back to it.

2) Verify that the load and RPM readings are correct.

3) Select the compensation tables that you want on or off.

4) Tune by load. Since injection events are a multiple of RPM, fuel automatically increases with RPM. That means you can start with the same pulse width for all RPM at a given pressure.

5) Use click-and-drag to highlight regions of the table. Directly fill a value or alter the values by using offset, multiply or divide.

6) Use copy and paste to move table values between TunerPro RT and Excel.

7) Enable emulation to upload changes in real time.

8) Save your bin for use later before closing TunerPro RT.

Electrical Characteristics:

PARAMETER	CONDITIONS	MIN	TYP	MAX	UNITS
Supply Voltage	BATT+ to BATT-	12	13.5	15	V
Supply Current	Into BATT+ terminal, no injection		16		mA
Tach threshold	Normal operation		2.5		V
RPM	Max engine speed			20k	RPM
VIN Range	Normal operation	0		5	V
VIN Resistance	To ground, Normal operation		100k		Ω
Pressure Range	PT1 and PT2	0		4	bar
L Injector peak	Initial sink current, low Ω injector		4		A
L Injector hold	Steady state sink current		1		A
H Injector limit	Max current before shutdown		6		A

Mechanical Characteristics:

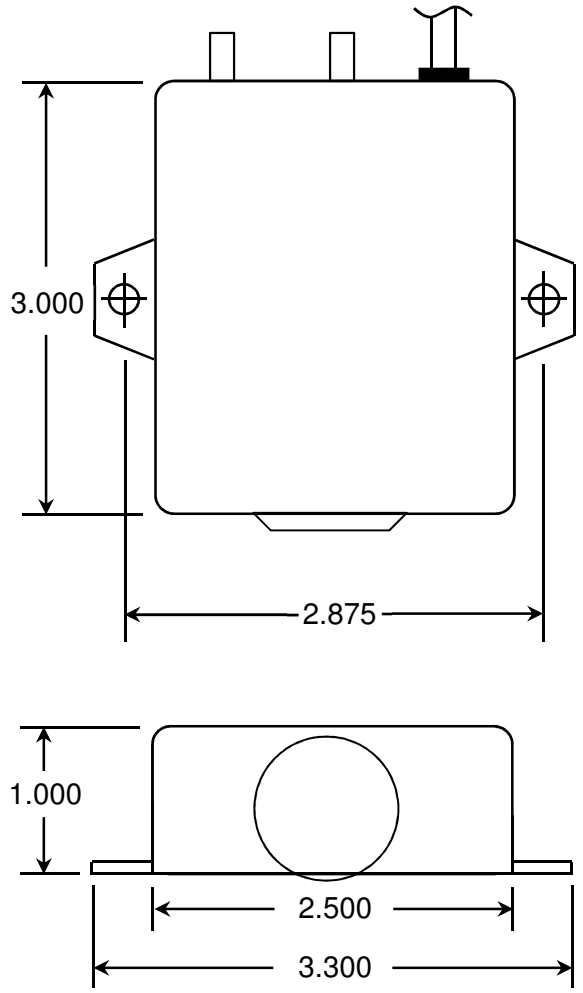

SPLIT SECOND

1949 E. Deere Ave.
Santa Ana, CA 92705
(949) 863-1359
www.splitsec.com