Wiring For MAF Conversion on E30 325i BMW using PSC1-004

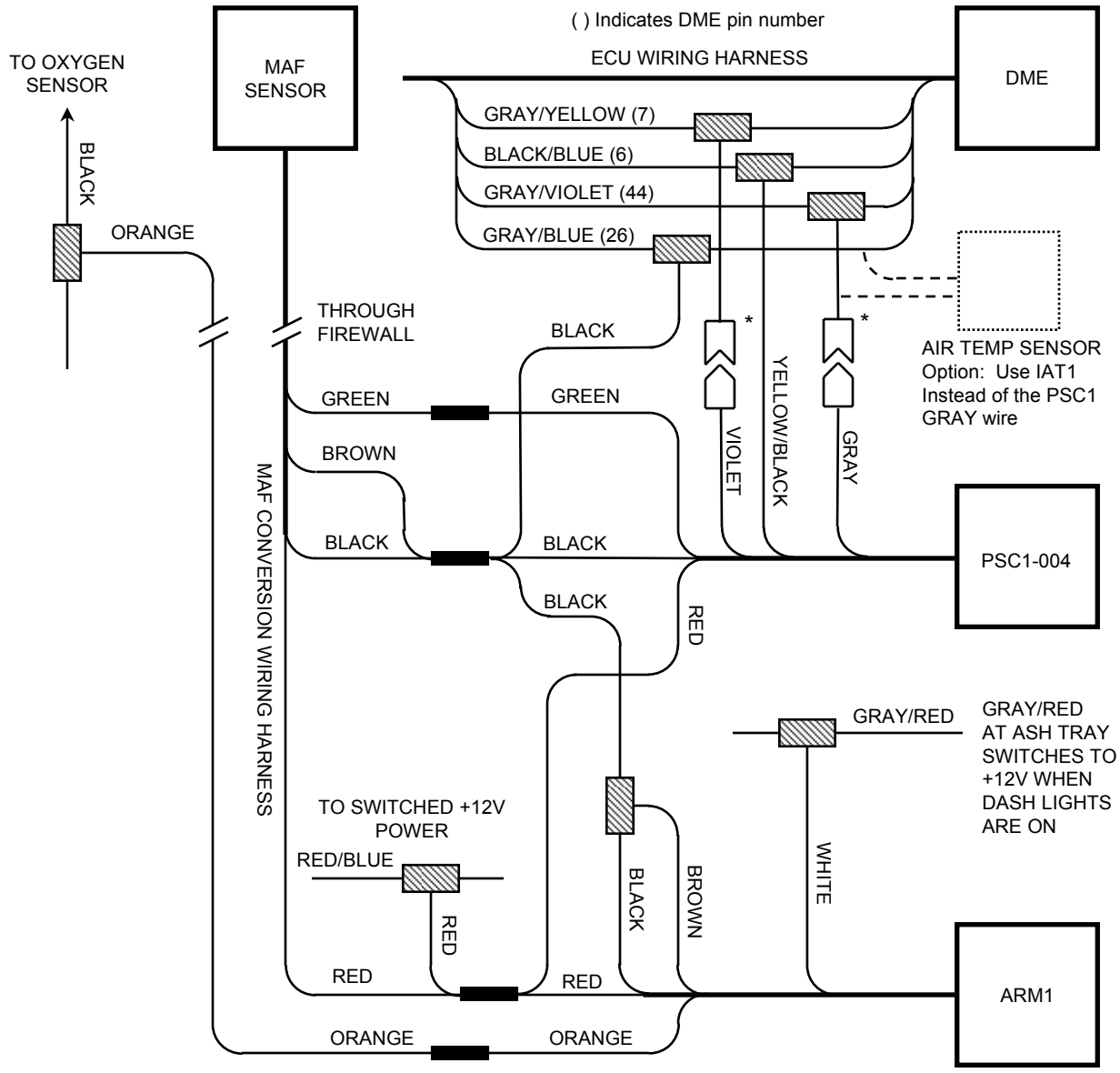

BUTT SPLICE CONNECTOR

RING CRIMP CONNECTOR

INSTANT SPLICE CONNECTOR

IN-LINE CONNECTOR

* NOTE: IN-LINE CONNECTORS MUST BE DISCONNECTED IF THE STOCK AIR FLOW METER IS RECONNECTED

12/6/13